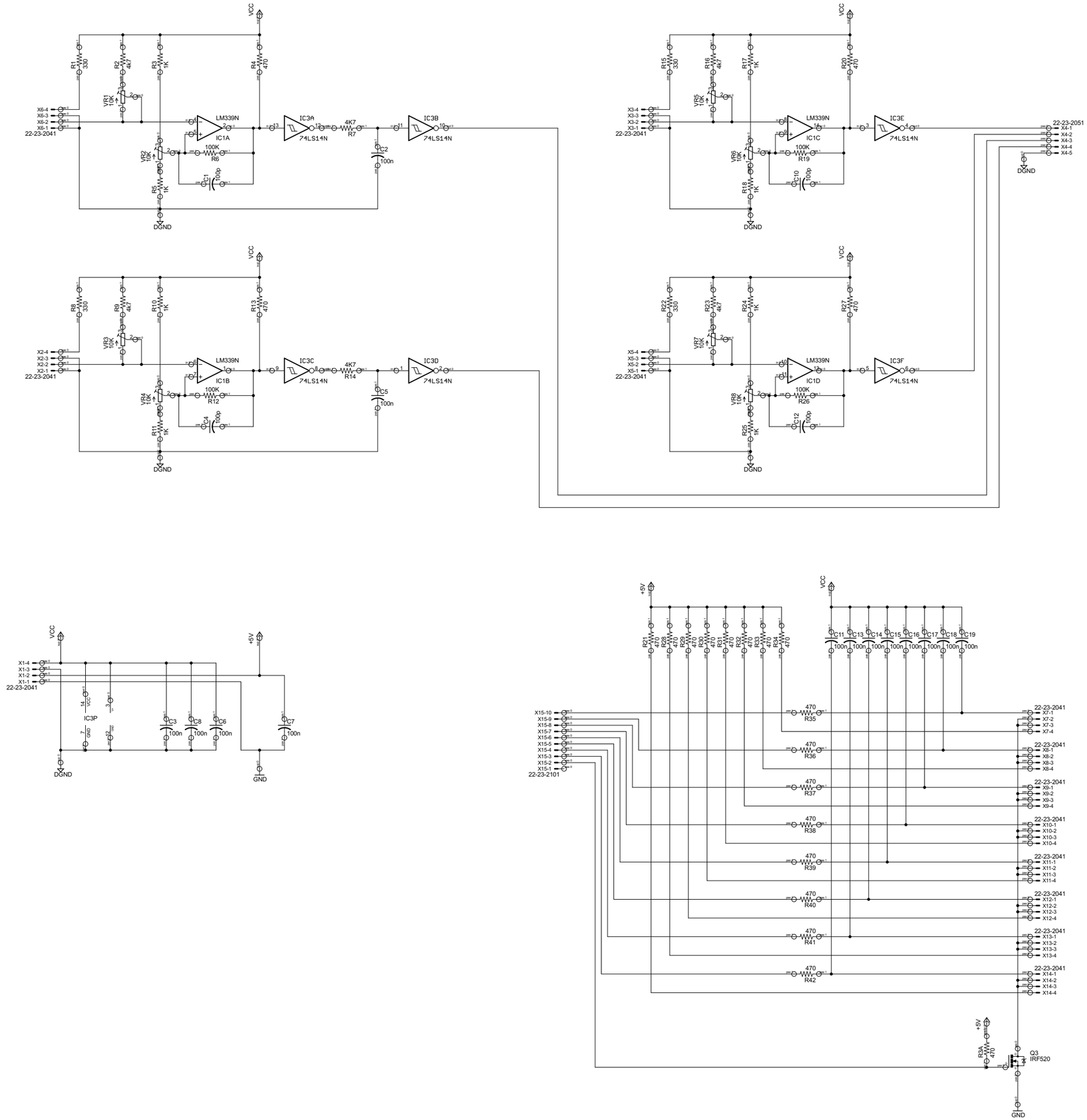

03/01/2013 11:43:59 f=0.60 C:\Documents and Settings\mjf\My Documents\eagle\H-Bridge\interface_02.sch (Sheet: 1/1)